SUBMITTAL DATA SHEET

SPLIT-SYSTEM EVAPORATOR BLOWERS
7.5, 10, 15, 20 & 25 TONS
MODELS: NC/NL090 thru 300, 2-PIPE
ND/NM120 thru 240, 4-PIPE

JOB NAME:			LOCATION:	
PURCHASER:			ORDER NO:	
ENGINEER:				
SUBMITTED TO:	FOR:	REF:	APPROVAL:	CONSTRUCTION:
SUBMITTED BY:			DATE:	
UNIT DESIGNATION:			SCHEDULE NO.	MODEL NO.

PRODUCT DATA

Cooling Performance

Total Capacity . . . . . _____ MBH
Sensible Capacity . . . . . _____ MBH
Evaporator Pressure at Saturation. . . . . _____ PSIG
Evaporator Temperature at Saturation. . . . . _____ °F
Total Supply Air . . . . . _____ CFM
Temp. of air Entering Evaporator Coil . . . . . ___/___ °F DB/WB

Heating Performance

Refer to field-installed accessories on reverse side.

Supply Air Blower Performance

Total Supply Air . . . . . _____ CFM
Total Resistance External To Unit . . . . . _____ IWG
Blower Speed. . . . . _____ RPM
Blower Output Requirement. . . . _____ BHP
Motor Rating . . . . . _____ HP
Power Input Requirement. . . . . _____ KW

Electrical Data

Power Supply. . . . . ___/___/___
Total Unit Ampacity. . . . . _____ AMPS
Minimum Wire Size . . . . . _____ AWG (Copper Conductors)
Maximum Fuse Size Dual Element . . . . . _____ AMPS

Unit Weight

Total Operating Weight . . . . . _____ LBS (Including field-installed accessories)

FEATURES

- R-410A REFRIGERANT
- POWDER PAINT FOR DURABILITY
- INHERENTLY PROTECTED FAN MOTORS 7.5-20 TON
- SINGLE AND DUAL REFRIGERATION CIRCUITS (SINGLE ON NC/NL AND DUAL ON ND/NM MODELS)
- PROVISIONS FOR HOT GAS BYPASS
- CSA APPROVAL
- 2” AND 4” FILTER RACK (4” FILTERS FIELD SUPPLIED) 7.5-20 TON
- ELECTRIC HEAT (FIELD INSTALLED) 7.5-20 TON
- HOT WATER HEATING COILS (FIELD INSTALLED)
- STEAM HEATING COILS (FIELD INSTALLED)
- FACTORY SELECTABLE MOTOR AND DRIVE OPTIONS 7.5-20 TON
- ADJUSTABLE TXV’S
- CAN BE APPLIED VERTICALLY OR HORIZONTALLY
- SINGLE POINT POWER CONNECTION
- ONE YEAR LIMITED PARTS WARRANTY ON COMPLETE UNIT
- DESIGNED TO OPERATE WITH COOLING ONLY UNITS OR HEAT PUMPS 7.5-20 TON

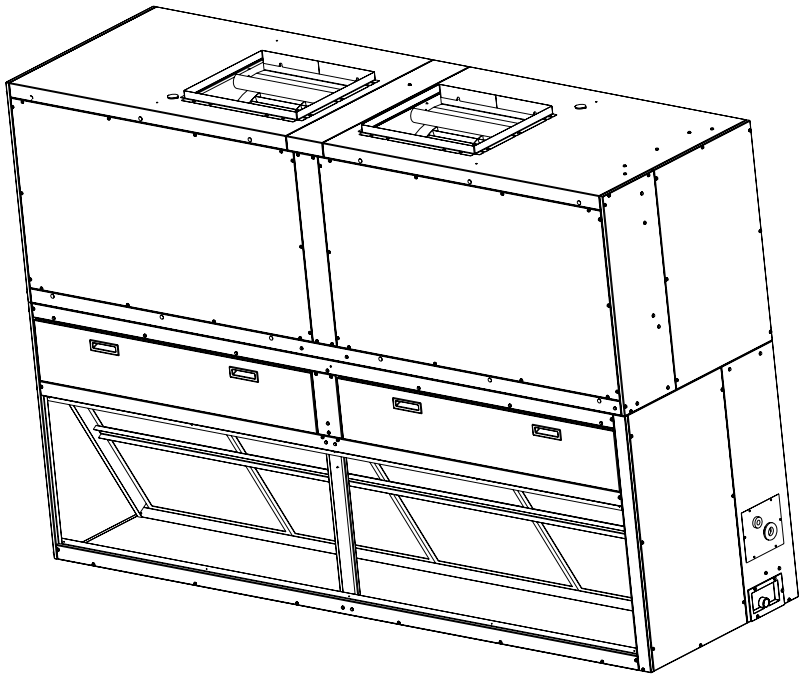

NC/NL/ND/NM INDOOR UNIT

Corner Weights & Center of Gravity NC/ND 090 Thru 240 Units

Model	Drive Options	Weight (lbs.)		Center of Gravity (in.)		4 Point Load Location (lbs.)				6 Point Load Location (lbs.)					
		Shipping	Operating	X	Y	A	B	C	D	A	B	C	D	E	F
	Vertical Airflow														
NC090	Std. Mtr. and Drv.	524	498	16.2	26.7	109	128	141	120	71	79	88	97	86	78
	High Static Mtr. and Drv.	526	500	16.2	26.7	110	129	142	120	71	79	88	97	87	78
NC120	Std. Mtr. and Drv.	562	539	15.5	26.8	125	134	146	136	82	86	90	98	94	89
	High Static Mtr. and Drv.	573	550	15.5	26.7	127	136	148	139	84	87	91	100	96	91
ND120	Std. Mtr. and Drv.	564	541	15.5	26.9	126	135	145	136	83	87	91	98	94	89
	High Static Mtr. and Drv.	575	552	15.5	26.9	128	137	148	138	84	88	92	100	95	91
NC180	Std. Mtr. and Drv.	796	764	18.2	35.8	164	203	219	178	106	121	140	151	131	114
	High Static Mtr. and Drv.	824	792	18.2	35.8	170	210	227	184	110	126	145	157	136	118
ND180	Std. Mtr. and Drv.	796	764	18.2	35.8	164	203	219	178	106	121	140	151	131	114
	High Static Mtr. and Drv.	824	792	18.2	35.8	170	210	227	184	110	126	145	157	136	118
NC240	Std. Mtr. and Drv.	908	873	15.8	42.6	179	198	260	235	118	125	134	176	165	154
	High Static Mtr. and Drv.	938	903	15.7	42.4	185	204	269	245	122	129	138	182	171	161
ND240	Std. Mtr. and Drv.	908	873	15.8	42.6	179	198	260	235	118	125	134	176	165	154
	High Static Mtr. and Drv.	938	903	15.7	42.4	185	204	269	245	122	129	138	182	171	161
	Horizontal Airflow														
NC090	Std. Mtr. and Drv.	524	498	30.1	26.7	118	119	131	130	79	79	79	87	87	87
	High Static Mtr. and Drv.	526	500	30.1	26.7	119	120	132	130	79	79	80	88	87	87
NC120	Std. Mtr. and Drv.	562	539	29.9	26.8	129	129	140	141	86	86	86	94	94	94
	High Static Mtr. and Drv.	573	550	30.2	26.7	130	132	145	142	87	87	88	97	96	95
ND120	Std. Mtr. and Drv.	564	541	29.9	26.9	131	130	140	141	87	87	86	93	94	94
	High Static Mtr. and Drv.	575	552	30.2	26.9	132	133	144	142	88	88	89	96	96	95
NC180	Std. Mtr. and Drv.	796	764	33.7	35.8	179	187	203	194	119	122	126	136	132	128
	High Static Mtr. and Drv.	824	792	34.4	35.8	182	198	214	197	120	127	134	145	137	130
ND180	Std. Mtr. and Drv.	796	764	33.7	35.8	179	187	203	194	119	122	126	136	132	128
	High Static Mtr. and Drv.	824	792	34.4	35.8	182	198	214	197	120	127	134	145	137	130
NC240	Std. Mtr. and Drv.	908	873	30.1	42.6	188	189	249	247	125	126	126	166	165	164
	High Static Mtr. and Drv.	938	903	30.6	42.4	191	198	262	252	126	130	133	176	171	167
ND240	Std. Mtr. and Drv.	908	873	30.1	42.6	188	189	249	247	125	126	126	166	165	164
	High Static Mtr. and Drv.	938	903	30.6	42.4	191	198	262	252	126	130	133	176	171	167

Corner Weights & Center of Gravity NL/NM 090 Thru 240 Units

Model	Drive Option	Shipping Wt (lb)	Operating Wt (lb)	Center of Gravity		4 point Load Location (lb)				6 point Load Location (lb)					
				CG X	CG Y	A	B	C	D	A	B	C	D	E	F
	Vertical Airflow														
NL090	Std. Mtr. and Drv.	542	516	16.2	26.5	113	132	146	125	73	81	90	100	90	81
	High Static Mtr. and Drv.	549	523	16.2	26.5	114	133	148	127	74	82	91	102	91	83
NL120	Std. Mtr. and Drv.	586	563	15.4	26.6	130	138	152	143	86	89	93	102	98	95
	High Static Mtr. and Drv.	597	574	15.4	26.6	132	140	155	146	87	91	94	104	100	97
NM120	Std. Mtr. and Drv.	588	565	15.4	26.8	131	139	152	143	87	90	94	102	98	94
	High Static Mtr. and Drv.	599	576	15.4	26.8	133	141	155	146	88	92	95	104	100	96
NL180	Std. Mtr. and Drv.	794	762	17.9	34.3	161	191	223	188	104	116	131	153	136	122
	High Static Mtr. and Drv.	820	788	17.9	34.3	166	197	231	195	108	120	135	158	141	126
NM180	Std. Mtr. and Drv.	794	762	17.9	34.3	161	191	223	188	104	116	131	153	136	122
	High Static Mtr. and Drv.	820	788	17.9	34.3	166	197	231	195	108	120	135	158	141	126
NL240	Std. Mtr. and Drv.	932	897	15.7	42.4	184	202	267	244	121	128	136	180	170	160
	High Static Mtr. and Drv.	963	928	15.6	42.3	191	207	276	254	125	132	140	187	176	167
NM240	Std. Mtr. and Drv.	932	897	15.7	42.4	184	202	267	244	121	128	136	180	170	160
	High Static Mtr. and Drv.	963	928	15.6	42.3	191	207	276	254	125	132	140	187	176	167
	Horizontal Airflow														
NL090	Std. Mtr. and Drv.	542	516	30.6	26.5	120	125	138	133	79	82	84	93	91	88
	High Static Mtr. and Drv.	549	523	30.8	26.5	121	127	141	134	80	83	86	95	92	89
NL120	Std. Mtr. and Drv.	586	563	30.5	26.6	132	136	150	145	87	89	91	101	98	96
	High Static Mtr. and Drv.	597	574	30.8	26.6	133	140	155	147	88	91	94	104	100	97
NM120	Std. Mtr. and Drv.	588	565	30.5	26.8	133	137	150	145	88	90	92	100	98	96
	High Static Mtr. and Drv.	599	576	30.7	26.8	134	141	154	147	89	92	95	104	100	97
NL180	Std. Mtr. and Drv.	794	762	33.7	34.3	172	179	210	201	114	117	121	141	137	133
	High Static Mtr. and Drv.	820	788	34.3	34.3	174	189	221	204	115	121	127	149	142	135
NM180	Std. Mtr. and Drv.	794	762	33.7	34.3	172	179	210	201	114	117	121	141	137	133
	High Static Mtr. and Drv.	820	788	34.3	34.3	174	189	221	204	115	121	127	149	142	135
NL240	Std. Mtr. and Drv.	932	897	30.5	42.4	190	196	259	251	126	129	131	174	170	167
	High Static Mtr. and Drv.	963	928	30.9	42.3	193	205	273	257	127	133	138	184	176	169
NM240	Std. Mtr. and Drv.	932	897	30.5	42.4	190	196	259	251	126	129	131	174	170	167
	High Static Mtr. and Drv.	963	928	30.9	42.3	193	205	273	257	127	133	138	184	176	169

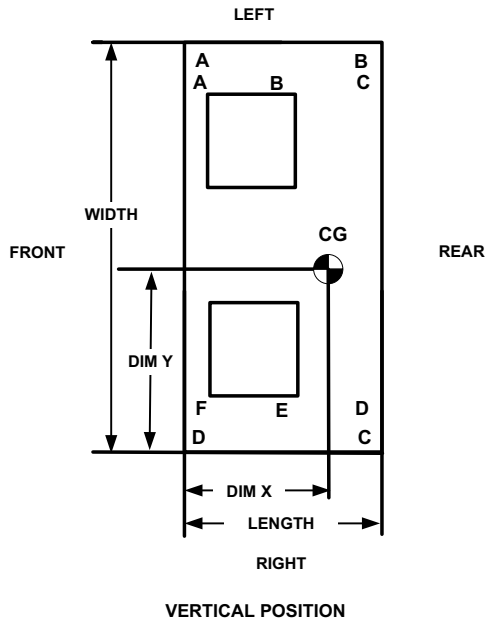

VERTICAL POSITION

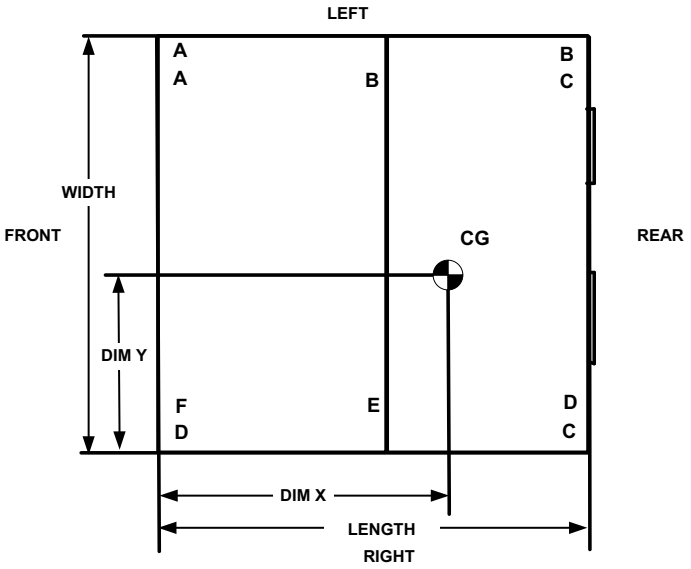

HORIZONTAL POSITION

Corner Weights & Center of Gravity NC300 Units

Model	Drive HP	Evaporator Section	Blower Section	Drive Section	Weight (lbs.)		Center of Gravity		4 Point Load Location (lbs.)				6 Point Load Location (lbs.)					
		Cabinet Wt (lb)	Cabinet Wt (lb)	Cabinet Wt (lb)	Shipping	Operating	CG X	CG Y	A	B	C	D	A	B	C	D	E	F
Vertical Airflow																		
NC300	5	539	463	111	1067	1130	19.0	45.5	296	321	267	247	204	220	194	172	159	180
	7.5	539	463	138	1067	1157	19.3	45.1	301	335	274	246	206	229	202	179	161	181
Horizontal Airflow																		
NC300	5	539	463	111	1067	1130	35.2	45.5	320	297	247	266	220	204	180	160	172	194
	7.5	539	463	137.8	1067	1157	35.4	45.1	329	307	252	269	225	210	185	164	176	198
Vertical Airflow With VFD & Intellispeed																		
NC300	5	539	491	111	1067	1158	19.0	45.4	304	329	273	253	209	226	199	176	163	184
	7.5	539	493	138	1067	1187	19.3	45.1	309	344	281	253	211	235	207	183	165	186
Horizontal Airflow With VFD & Intellispeed																		
NC300	5	539	491	111	1067	1158	35.7	45.4	324	308	256	269	223	212	187	166	174	196
	7.5	539	493	137.8	1067	1187	35.9	45.1	333	320	262	272	227	218	192	171	178	200

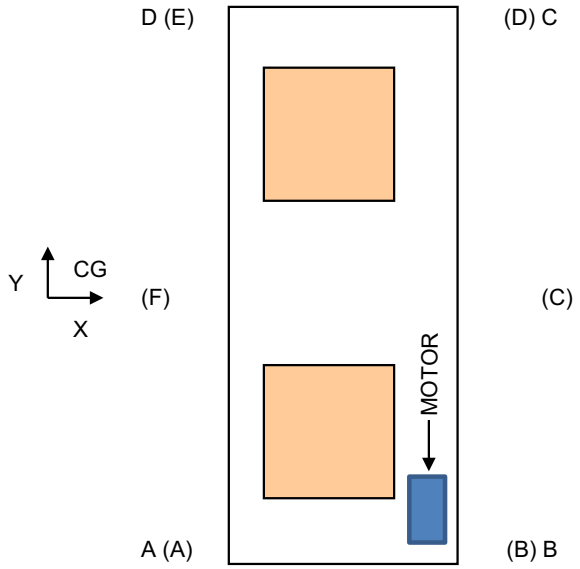

Vertical

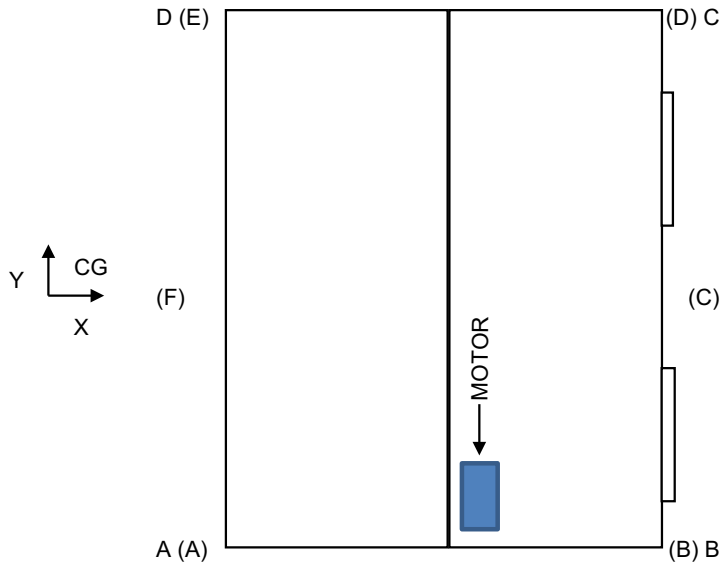

Horizontal

UNIT DIMENSIONS
NC/NL090/120 & ND/NM120

TOP VIEW

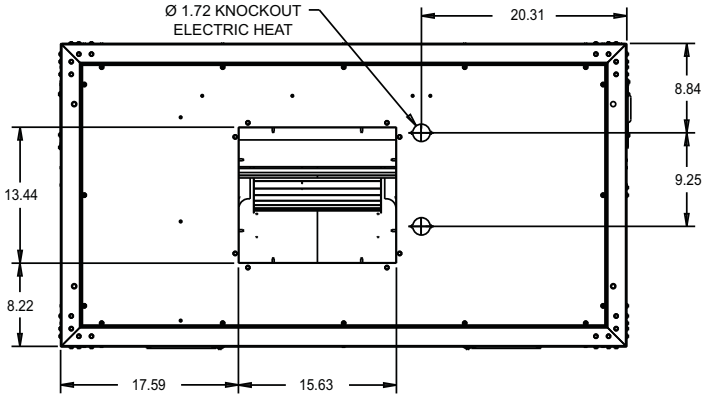

TOP VIEW - BLOWER OUTLET
7.5 TON INDOOR

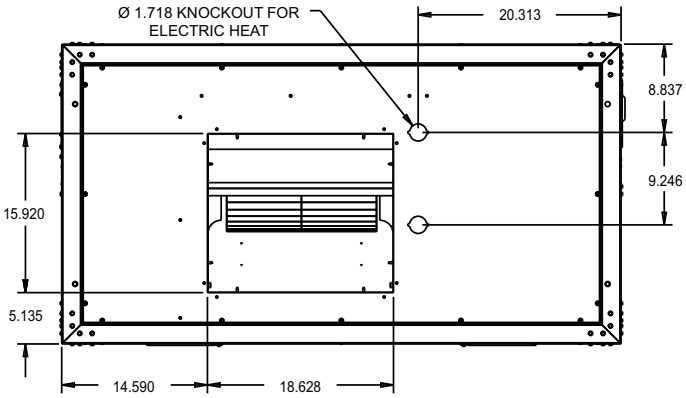

TOP VIEW - BLOWER OUTLET
10 TON INDOOR

FRONT AND SIDE VIEW

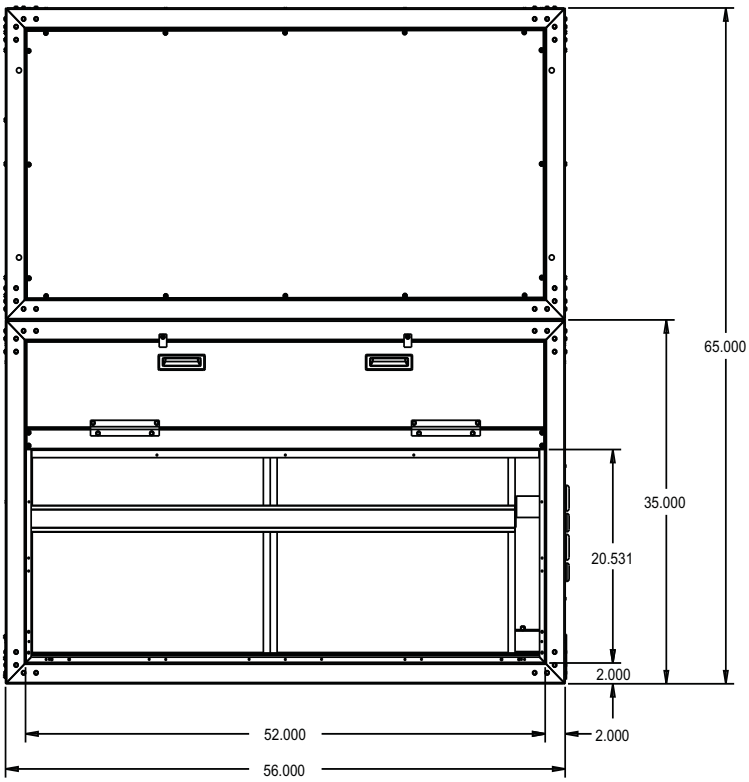

FRONT VIEW - RETURN AIR
7.5 - 10 TON INDOOR

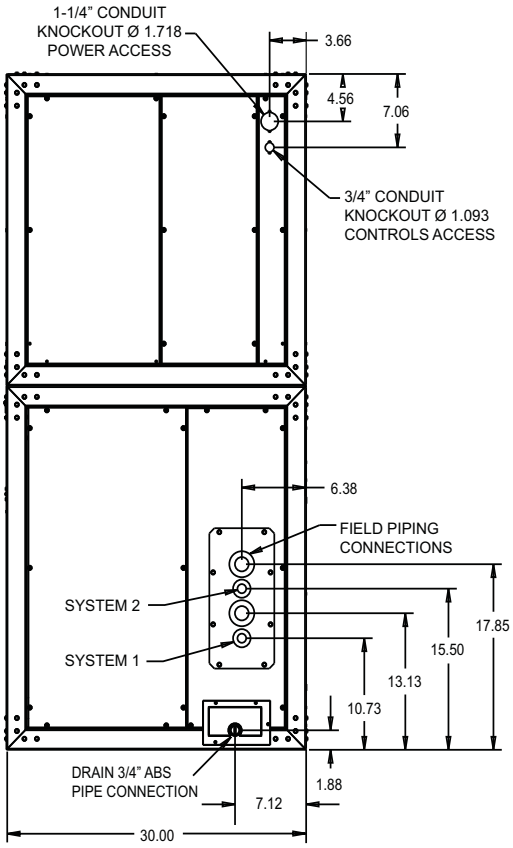

RIGHT SIDE VIEW - DRAIN PIPING/CONTROLS

***SEE UNITS PHYSICAL DATA TABLE FOR PIPING AND ELECTRICAL SIZE CONNECTIONS**

UNIT DIMENSIONS (CONT.)
NC/NL090/120 & ND/NM120

BOTTOM VIEW

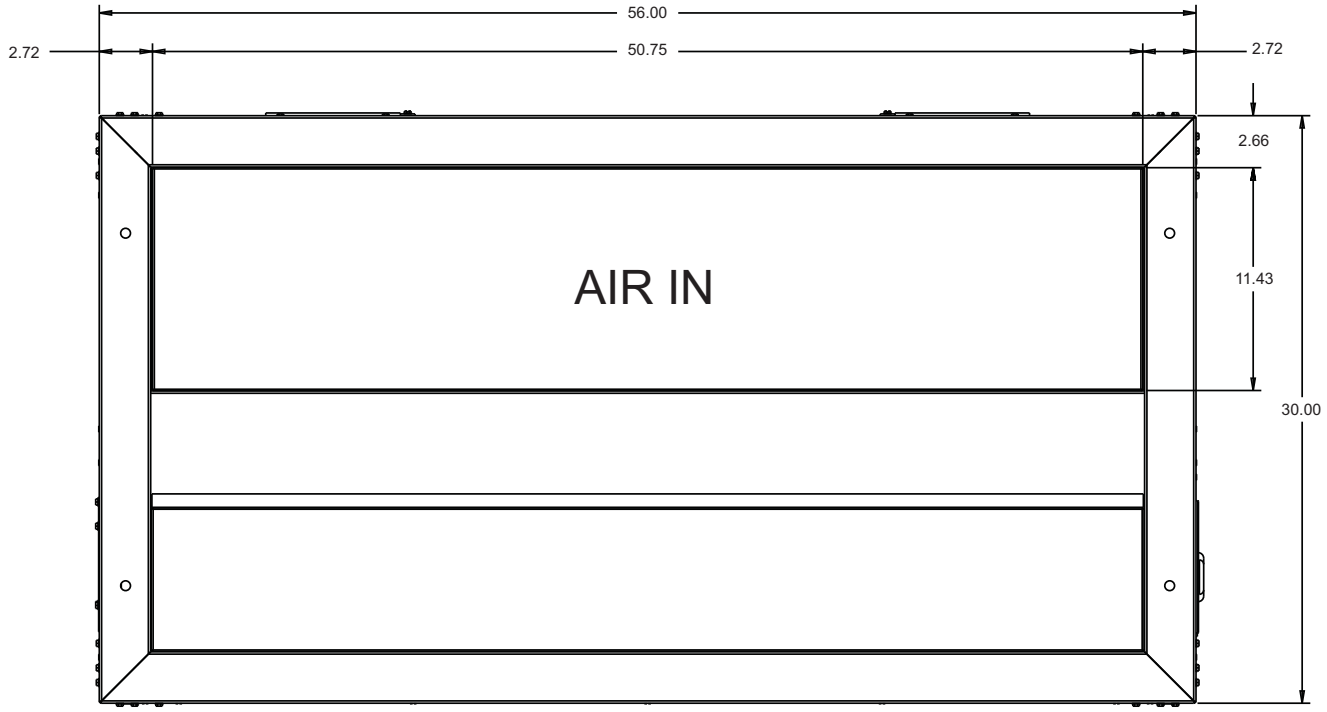

HORIZONTAL CONFIGURATION

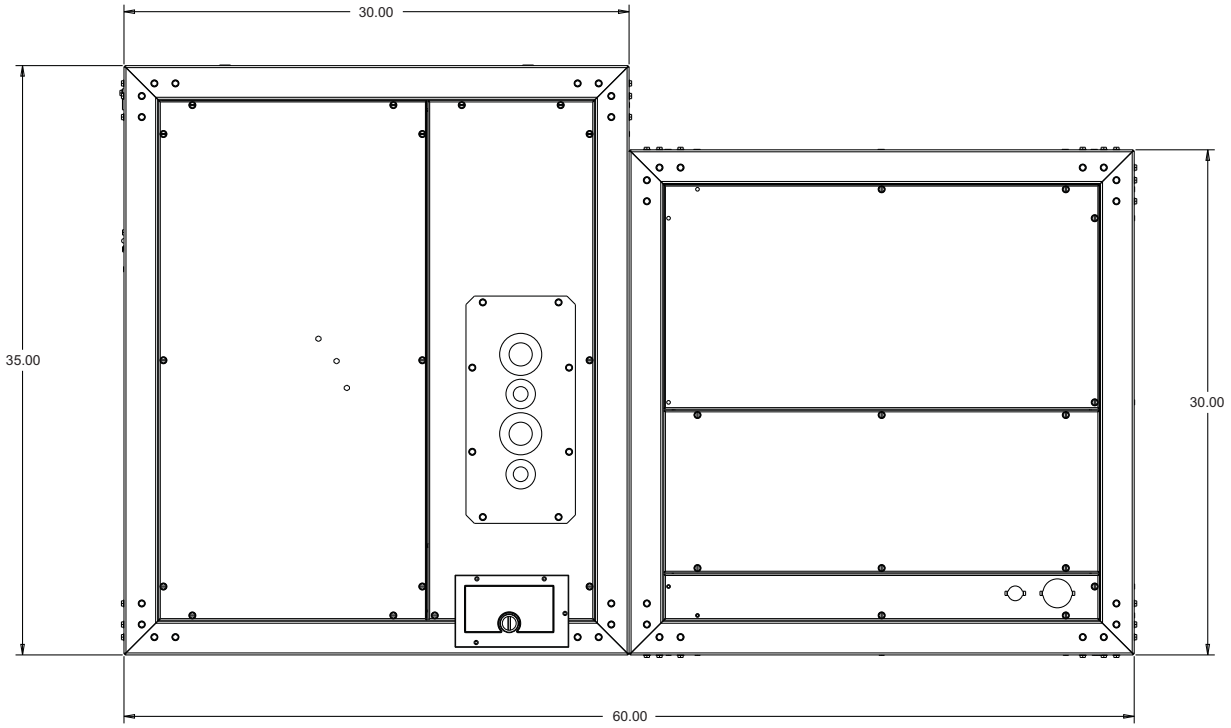

UNIT DIMENSIONS (CONT.)
NC/ND/NL/NM180

TOP VIEW

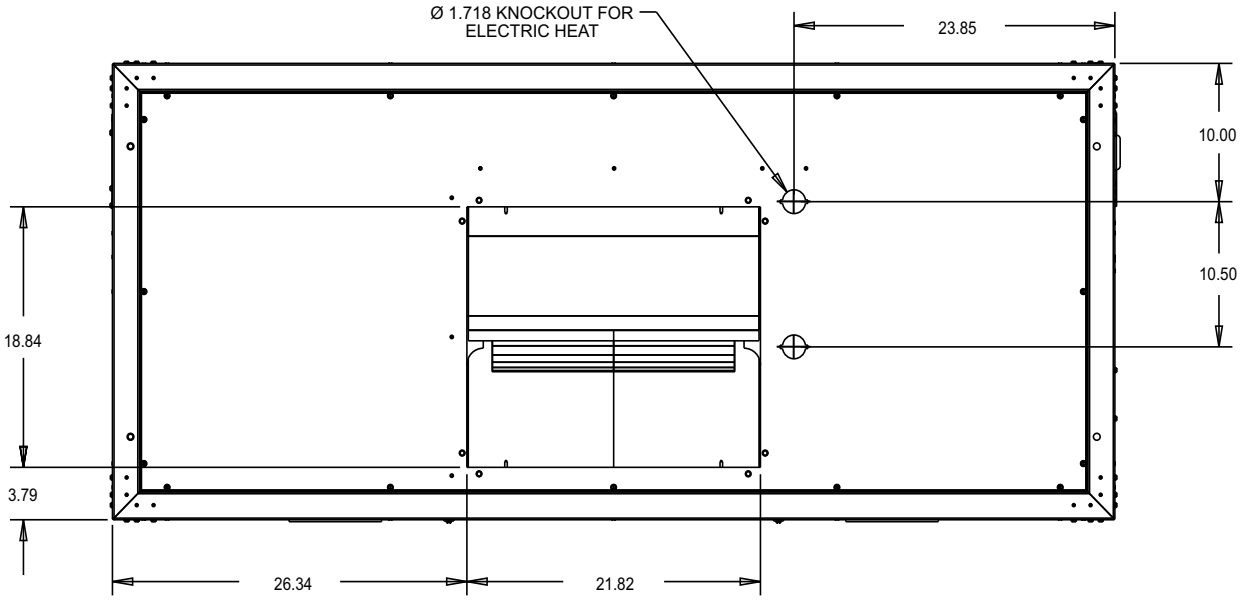

TOP VIEW - BLOWER OUTLET

FRONT AND SIDE VIEW

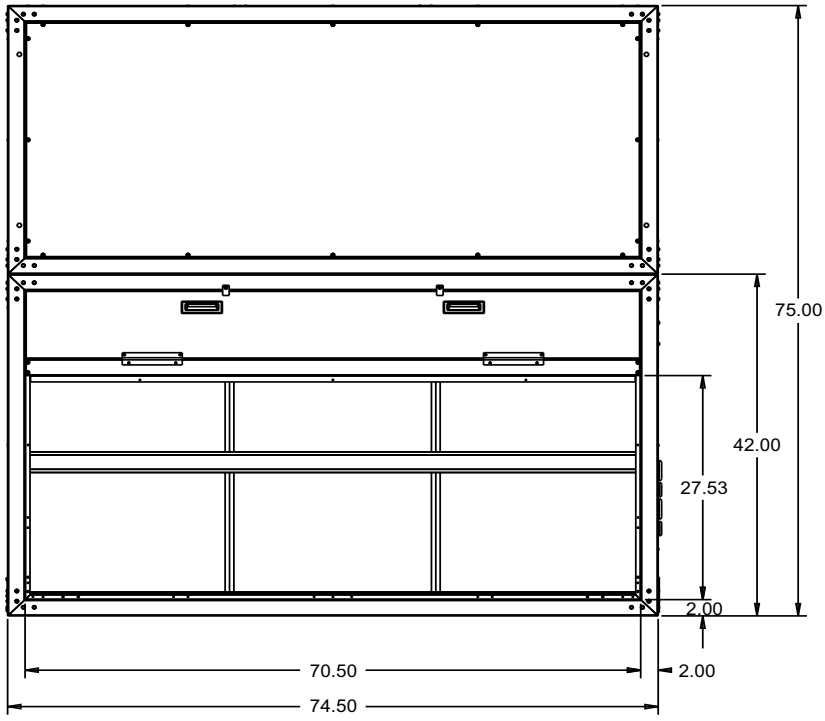

FRONT VIEW - RETURN AIR INDOOR

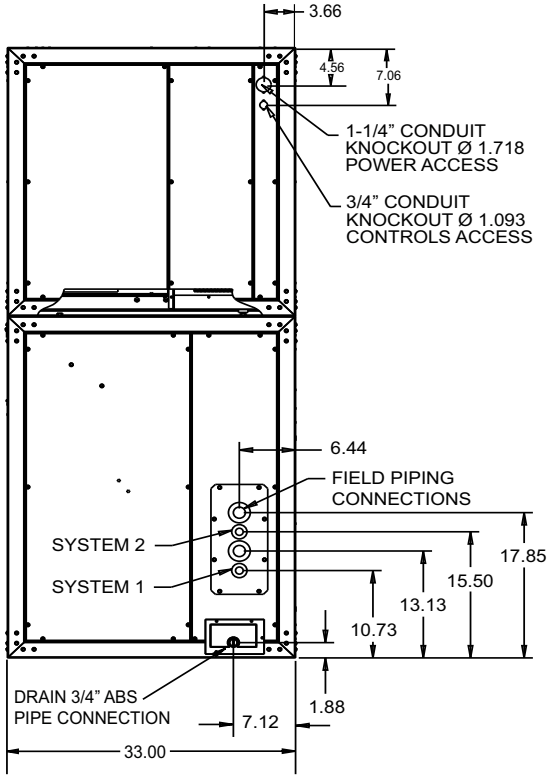

RIGHT SIDE VIEW - DRAIN PIPING/CONTROLS

***SEE UNITS PHYSICAL DATA TABLE FOR PIPING AND ELECTRICAL SIZE CONNECTIONS**

UNIT DIMENSIONS (CONT.)
NC/ND/NL/NM180

BOTTOM VIEW

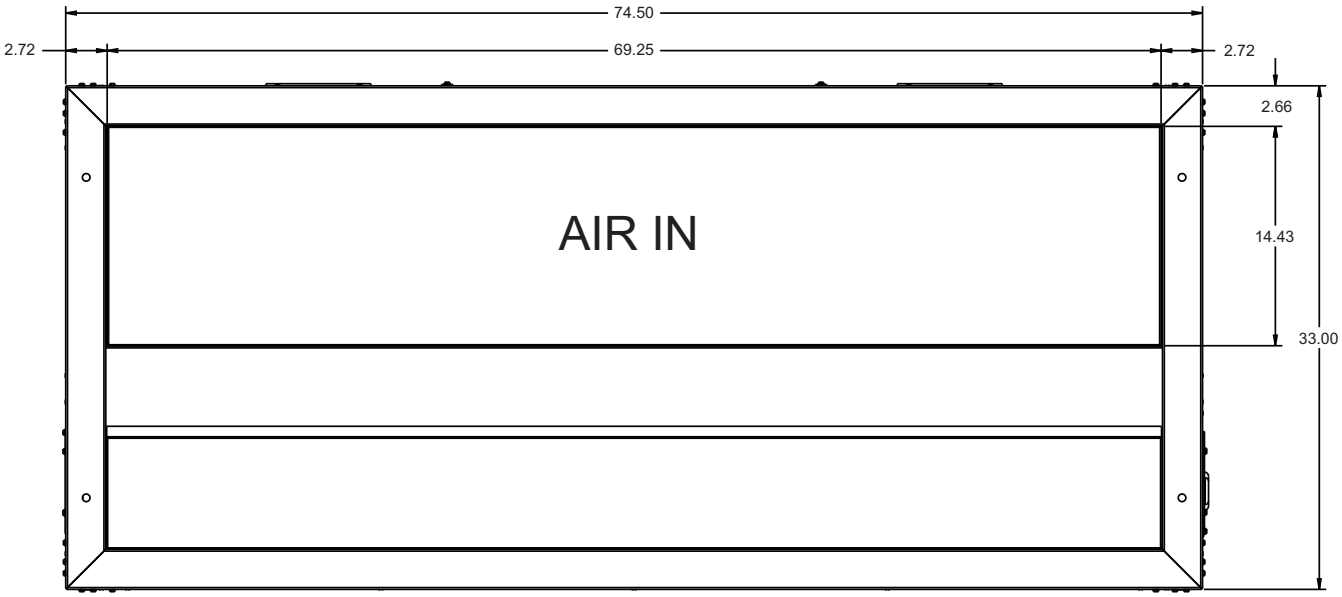

HORIZONTAL CONFIGURATION

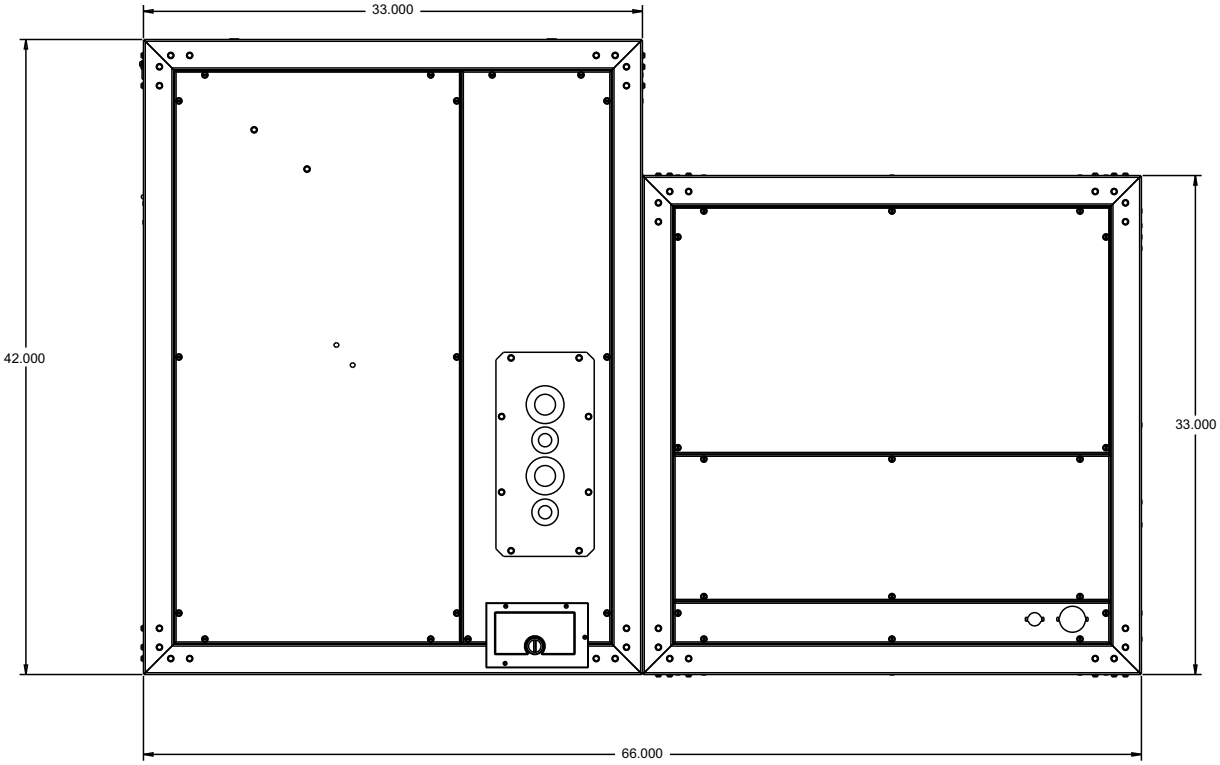

UNIT DIMENSIONS (CONT.)
NC/ND/NL/NM240

TOP VIEW

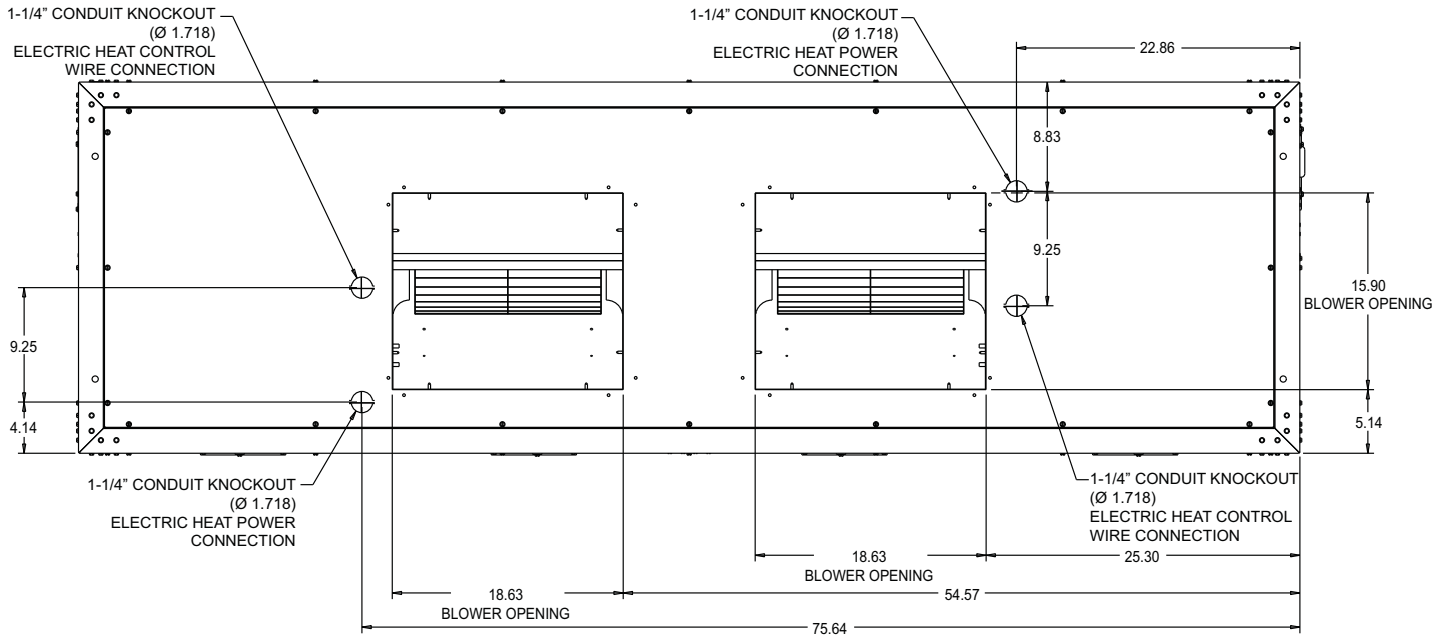

TOP VIEW BLOWER OUTLET
INDOOR

FRONT AND SIDE VIEW

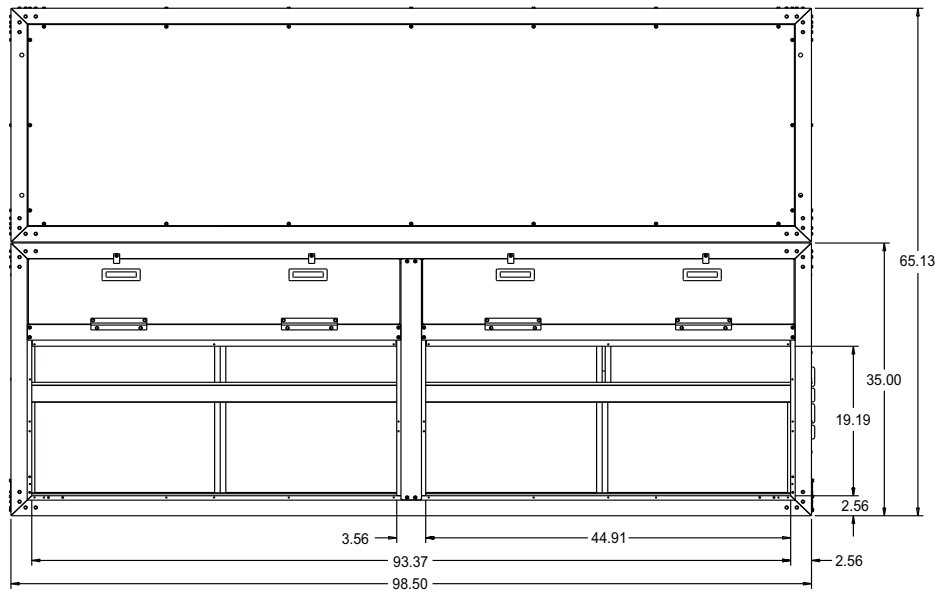

FRONT VIEW - RETURN AIR
INDOOR

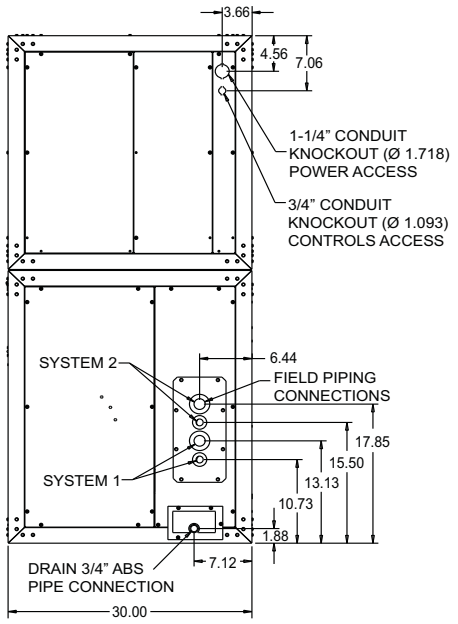

RIGHT SIDE VIEW - DRAIN PIPING/CONTROLS

***SEE UNITS PHYSICAL DATA TABLE FOR PIPING AND ELECTRICAL SIZE CONNECTIONS**

UNIT DIMENSIONS (CONT.)
NC/ND/NL/NM240

BOTTOM VIEW

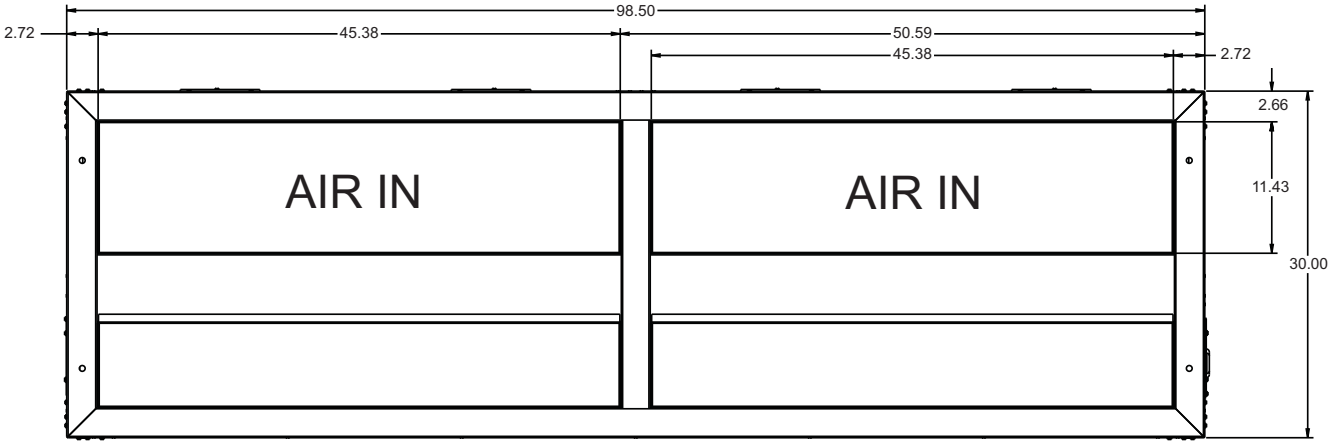

HORIZONTAL CONFIGURATION

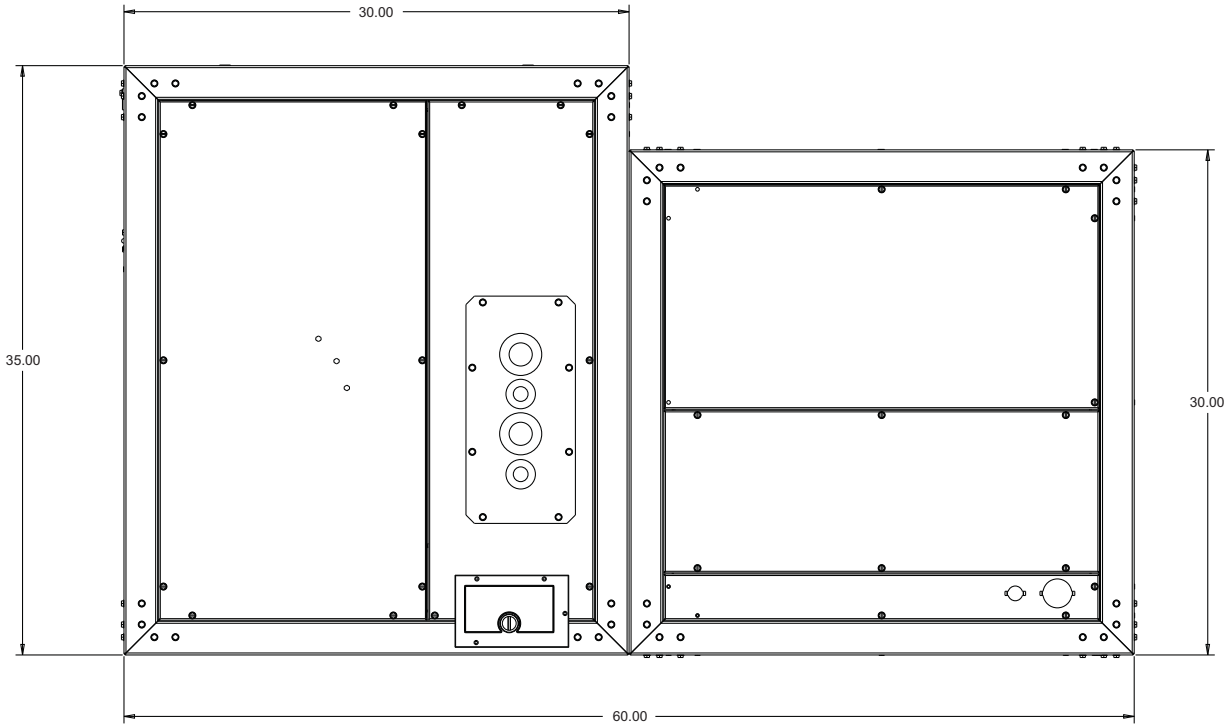

UNIT DIMENSIONS (CONT.)
NC300

TOP VIEW

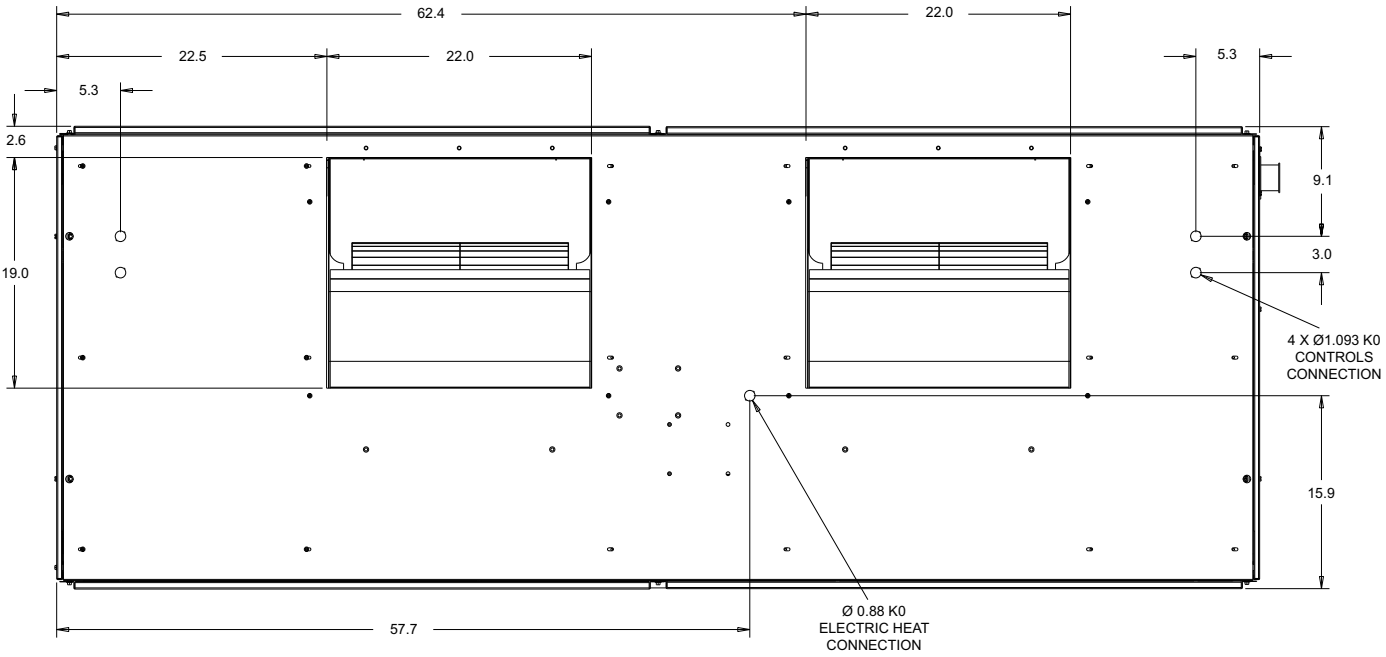

FRONT AND SIDE VIEW

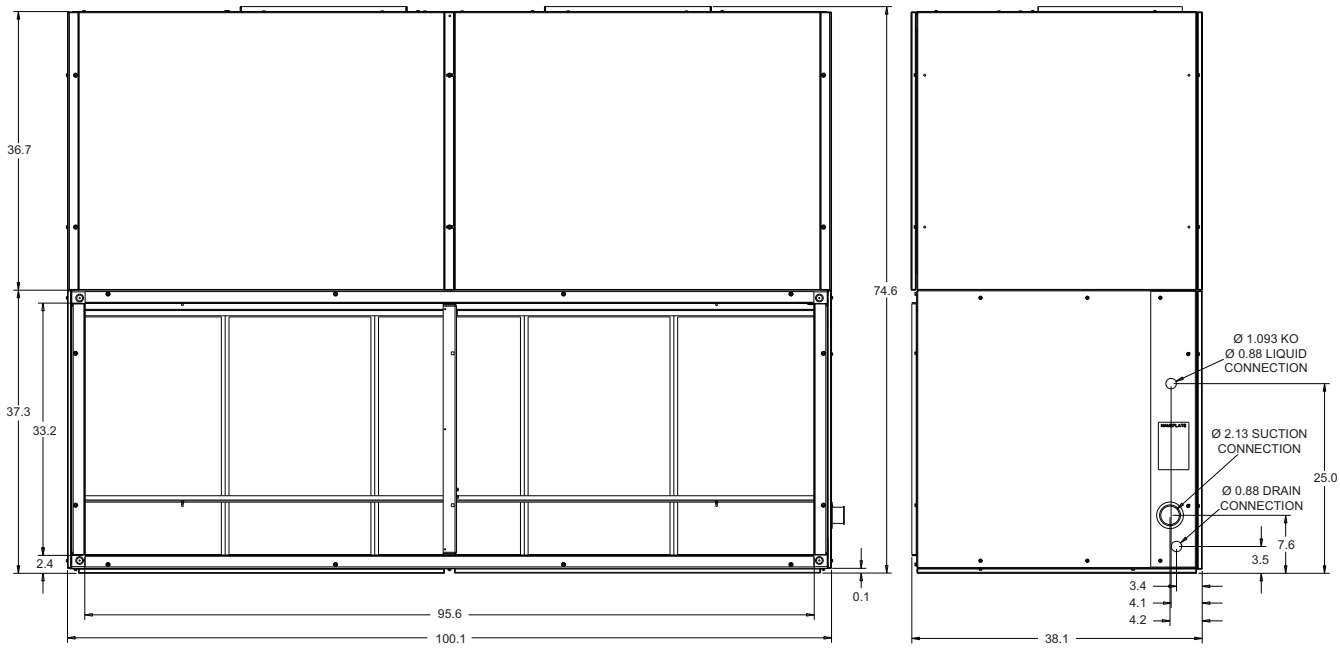

***SEE UNITS PHYSICAL DATA TABLE FOR PIPING AND ELECTRICAL SIZE CONNECTIONS**

UNIT DIMENSIONS (CONT.)
NC300

HORIZONTAL CONFIGURATION

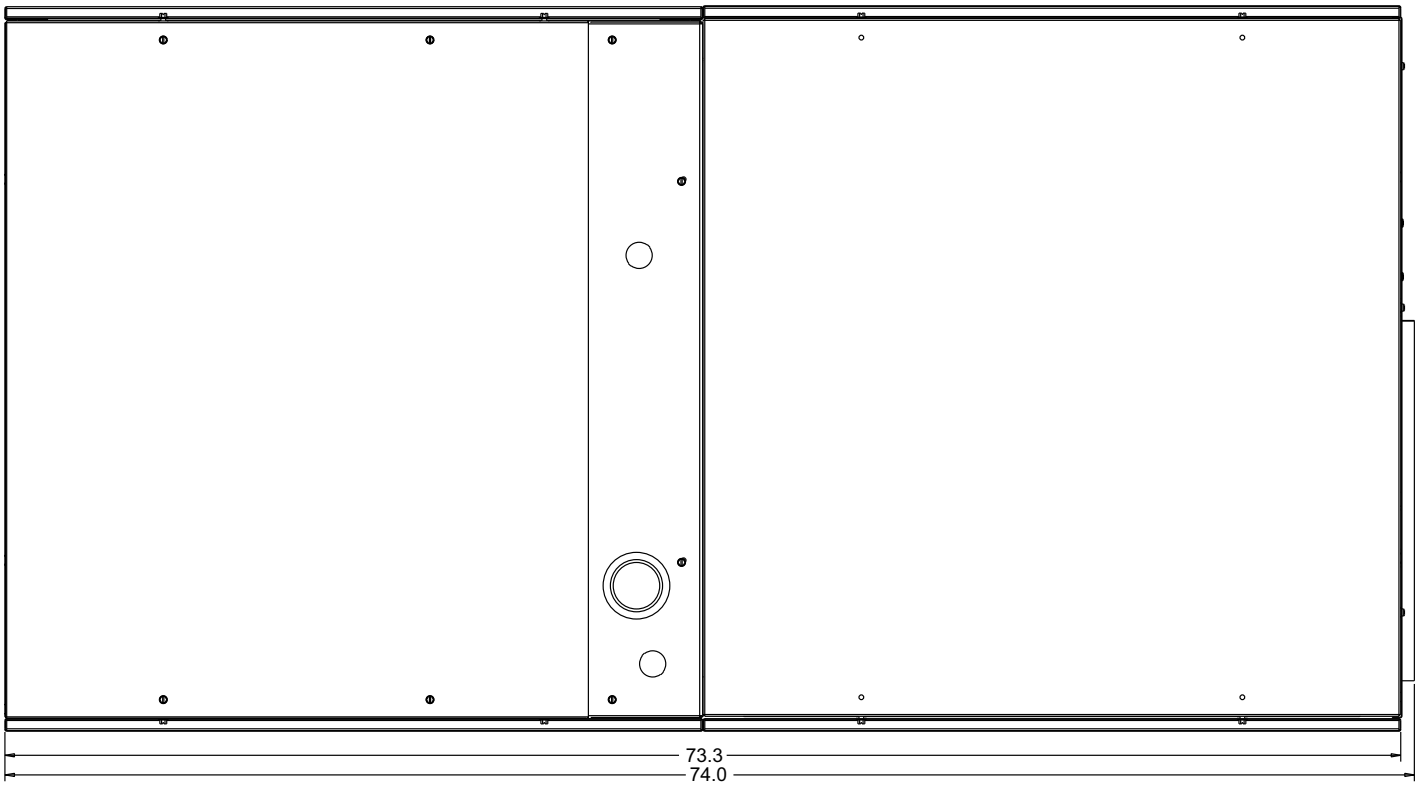

PHYSICAL DATA

MODEL	NC/NL090	NC/NL120	ND/NM120	NC/NL180	ND/NM180	NC/NL240	ND/NM240	NC300
DIMENSIONS (inches)								
Length	56.0	56.0	56.0	74.5	74.5	98.5	98.5	100.1
Width	30.0	30.0	30.0	33.0	33.0	30.0	30.0	38.1
Height	65.0	65.0	65.0	75.0	75.0	65.1	65.1	74.6
SYSTEM DATA								
No. Refrigeration Circuits	1	1	2	1	2	1	2	1
Suction Line OD (in.)	1 1/8	1 3/8	1 1/8	1 5/8	1 3/8	1 5/8	1 3/8	2 1/8
Liquid Line OD (in.)	5/8	7/8	5/8	7/8	5/8	7/8	7/8	7/8
Power Wiring Knockout	1 3/4	1 3/4	1 3/4	1 3/4	1 3/4	1 3/4	1 3/4	7/8
Control Wiring Knockout	1	1	1	1	1	1	1	1
Electric Heat Wiring Knockout	1 3/4	1 3/4	1 3/4	1 3/4	1 3/4	1 3/4	1 3/4	7/8
Drain Line Fitting PVC Stub	3/4	3/4	3/4	3/4	3/4	3/4	3/4	7/8[1]
BLOWER OUTLET								
Number	1	1	1	1	1	2	2	2
Width	13.4	15.9	15.9	18.9	18.9	15.9	15.9	22
Length	15.6	18.6	18.6	21.6	21.6	18.6	18.6	22
RETURN AIR INLET								
Width	20.5	20.5	20.5	27.3	27.3	19.2	19.2	33.2
Length	52.0	52.0	52.0	71.9	71.9	93.4	93.4	95.6

1. 7/8 in Steel Pipe

Minimum Clearances

Top with Supply Air Opening[1]	24”
Front with Return Air Opening	24”
Right Side with access for Piping, Power & Control Wiring Connections[2]	24”
Left Side	24”
Rear[3]	N/A
Bottom[4]	N/A

1. This dimension will vary if an electric heater, a supply air plenum or a base is used.
2. This dimension is required for normal installation and service.
3. Although no clearance is required for service and operation, some clearance may be required for routing the power and control wiring.
4. Allow enough clearance to trap the condensate drain line.

   Note: If the coil has to be removed, the blower section can be unbolted and set aside and the coil can be lifted out the top of the evaporator section.

FIELD-INSTALLED ACCESSORIES

STEAM COIL MODEL . . . . . ☐
- Steam Pressure . . . . . _____ PSIG
- Capacity . . . . . _____ MBH
- Steam Rate . . . . . _____ LBS/HR
- Entering Air Temperature . . . . . _____ °F

ELECTRIC HEAT. . . . . _____ KW

HOT WATER COIL . . . . . ☐
- Capacity . . . . . _____ MBH
- Entering Water Temperature . . . . . _____ °F
- Water Flow Rate . . . . . _____ GPM
- Entering Air Temperature . . . . . _____ °F
- Water Pressure Drop . . . . . _____ PSI

BASE ACCESSORY . . . . . ☐

BOTTOM RETURN ACCESSORY . . . . . ☐

SUSPENSION MOUNTING ACCESSORIES (25 TON) . . . . . ☐

SUPPLY AIR PLENUM . . . . . ☐

RETURN AIR GRILLE . . . . . ☐

INTELLISPEED VFD** . . . . . ☐

INTELLISPEED VFD WITH BYPASS** . . . . . ☐

* Units with electric heat have a single source power supply.

** NC 300 Units.

Refer to PRODUCT DATA on front side for electrical data.

FACTORY-INSTALLED OPTIONS

TECHNICOATED COIL . . . . . ☐

E-COAT COIL . . . . . ☐

NTELLISPEED*** . . . . . ☐

INTELLISPEED VFD WITH BYPASS . . . . . ☐

*** Not available on NC300.

NOTES:

Subject to change without notice. Printed in U.S.A.
Copyright © 2017 by Johnson Controls, Inc. All rights reserved.

506414-YSD-I-0118
Supersedes: 506414-YSD-H-0517

York International Corporation
5005 York Drive
Norman, OK 73069